playmobil

9298

Wichtige Unterlagen, bitte sorgfältig aufbewahren !
Important: Please keep these instructions for future reference !
Documents importants, à conserver soigneusement !
Belangrijke documenten, bewaar deze zorgvuldig !

WARNING:
CHOKING HAZARD
Contains a small ball and small parts.
Not for children under 3 years.

"Ne concerne que les USA"

FIFA WORLD CUP RUSSIA 2018
OFFICIAL LICENSED PRODUCT

©FIFA, FIFA`s Official Licensed Product Logos, and the Emblems, Mascots, Posters and Trophies of the FIFA World Cup™ tournaments are copyrights and/or trademarks of FIFA.

(D) (A) (CH) (L) (B) **ACHTUNG!**
Nicht auf Augen oder Gesicht zielen.

(USA) (GB) (CDN) (M) (IRL) **WARNING!**
Do not aim at eyes or face.

(F) (CDN) (B) (L) (CH) **ATTENTION!**
Ne pas viser les yeux ou le visage

(E) (MEX) **¡ADVERTENCIA!**
No apuntar a los ojos ni a la cara.

(NL) (B) **WAARSCHUWING!**
Niet op ogen of gezicht richten.

(I) (CH) **AVVERTENZA!**
Non mirare agli occhi o al viso.

(P) **ATENÇÃO!**
Não apontar para os olhos ou face.

(DK) **ADVARSEL!**
Sigt ikke mod øjne eller ansigt.

(N) **ADVARSEL!**
Sikt ikke på ansikt eller øyne.

(S) (FIN) **VARNING!**
Sikta inte mot ögon eller ansikte.

(FIN) **VAROITUS!**
Ei saa kohdistaa suoraan silmiin tai kasvoihin.

(H) **FIGYELMEZTETÉS.**
Tilos szemre vagy arcra célozni.

(CZ) **UPOZORNĚNÍ!**
Nemiřte na oči nebo na obličej!

(EST) **HOIATUS!**
Ära sihi silmadesse ega näkku.

(LV) **BRĪDINĀJUMS!**
Nevērst pret acīm vai seju.

(LT) **ĮSPĖJIMAS!**
Netaikyti į akis arba veidą.

(SLO) **OPOZORILO!**
Ne merite v oči ali obraz.

(SK) **UPOZORNENIE!**
Nemieriť do očí alebo do tváre.

(PL) **OSTRZEŻENIE!**
Nie celować w oczy i twarz.

(TR) (CY) **DİKKAT!**
Göze veya yüze doğru tutmayınız.

(GR) (CY) **Προειδοποίηση!**
Μη μην γίνεται στόχευση στα μάτια ή στο πρόσωπο.

(RO) **AVERTISMENT!**
Nu se ţinteşte în ochi sau în faţă.

(BG) **Внимание!**
Не насочвайте към очите и лицето.

(HR) **UPOZORENJE!**
Ne ciljati u oči ili lice.

(CN) **警告！请勿瞄准眼睛或脸。**

2018 FIFA WORLD CUP RUSSIA™
2018 FIFA WORLD CUP RUSSIA™

30 80 3285

1

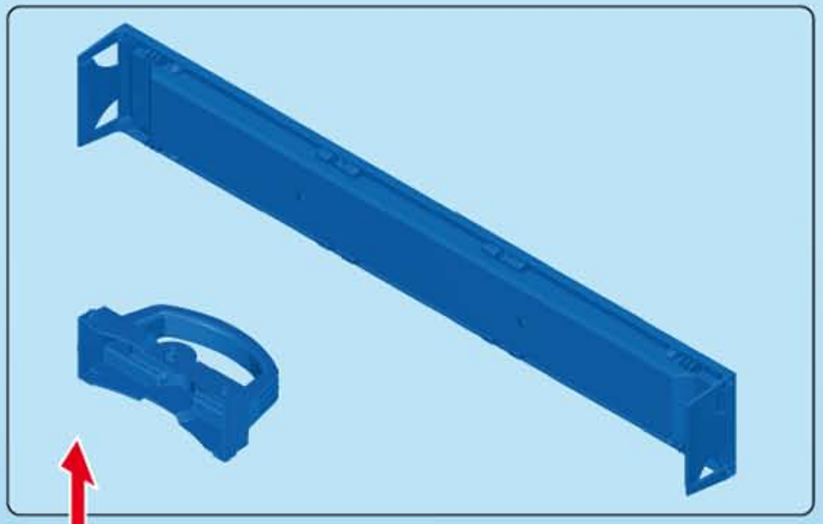

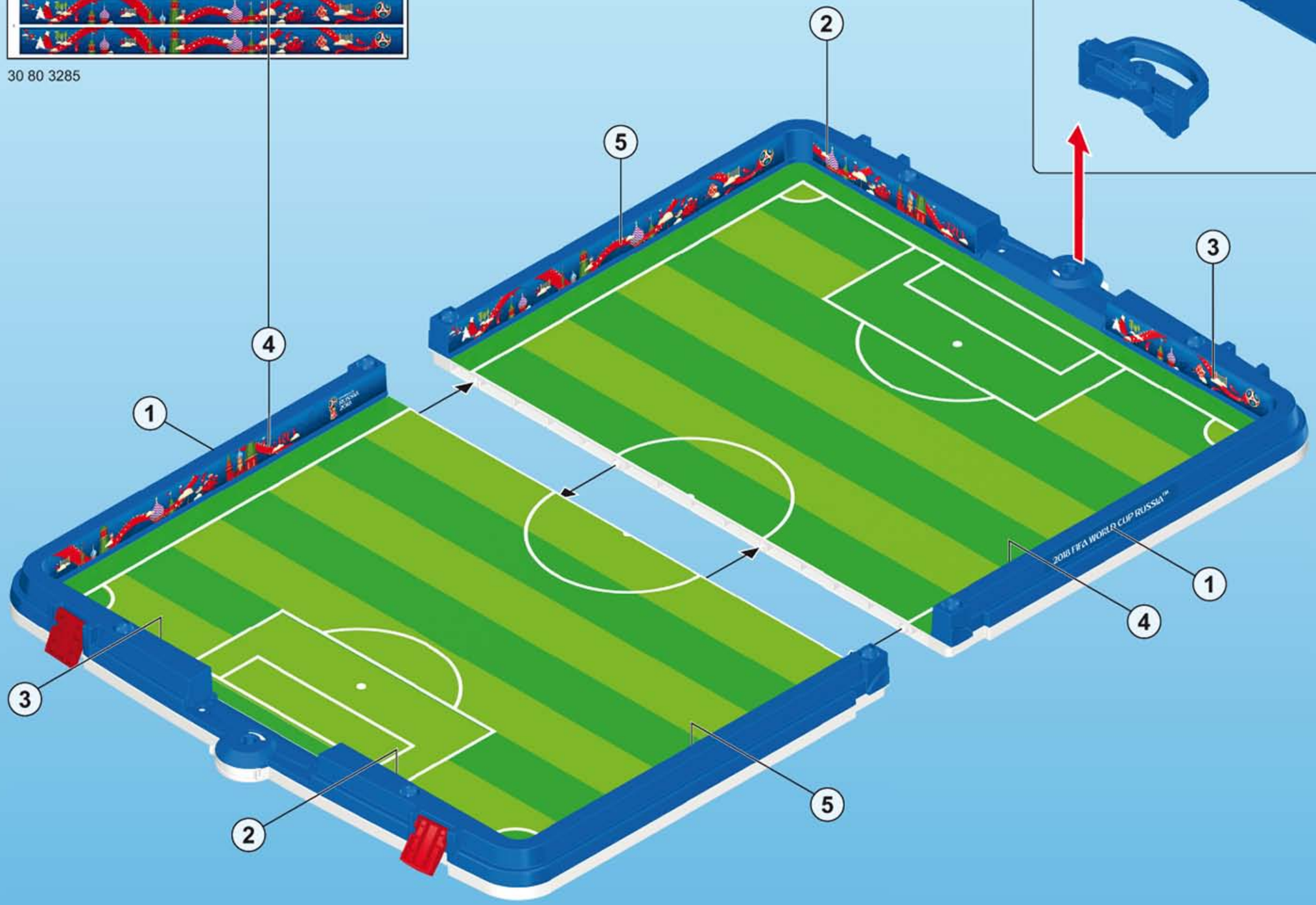
1
2
3
4
5
2018 FIFA WORLD CUP RUSSIA™

1

2x

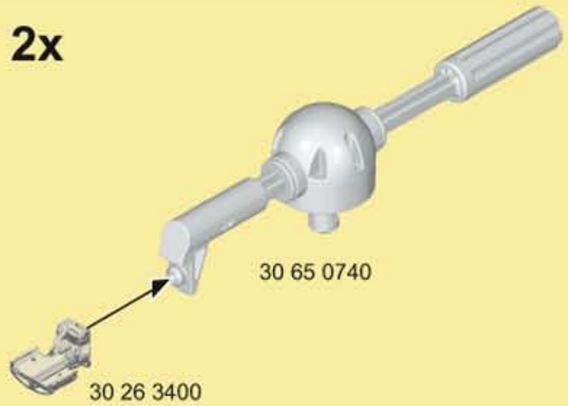

2

1

2

35 07 4822

1

2

2
2x
30 02 4692
30 02 4702
4x
30 64 6474
30 64 6474
2018 FIFA WORLD CUP RUSSIA™

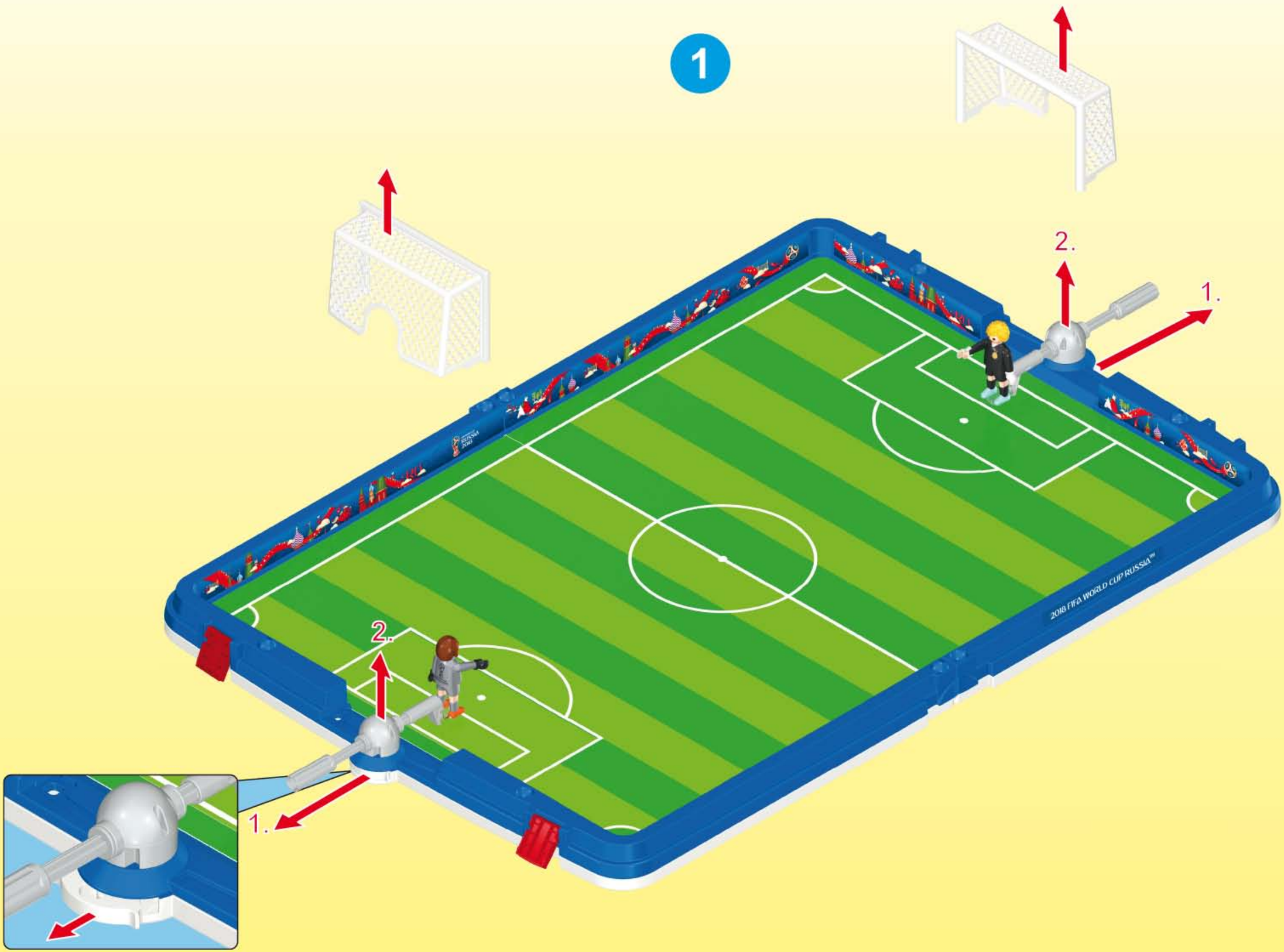
1
2.
1.
2.
1.
2018 FIFA WORLD CUP RUSSIA™

2

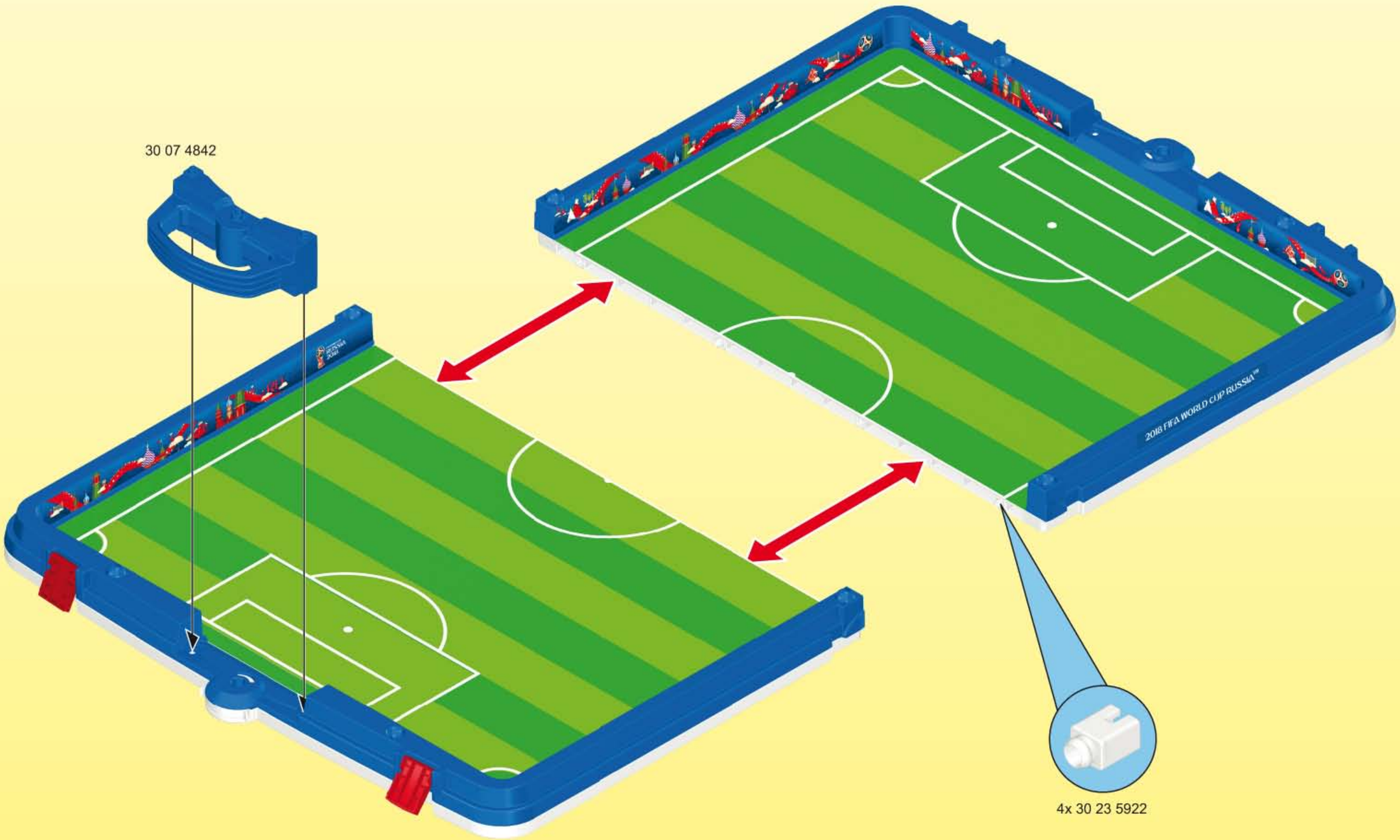

3

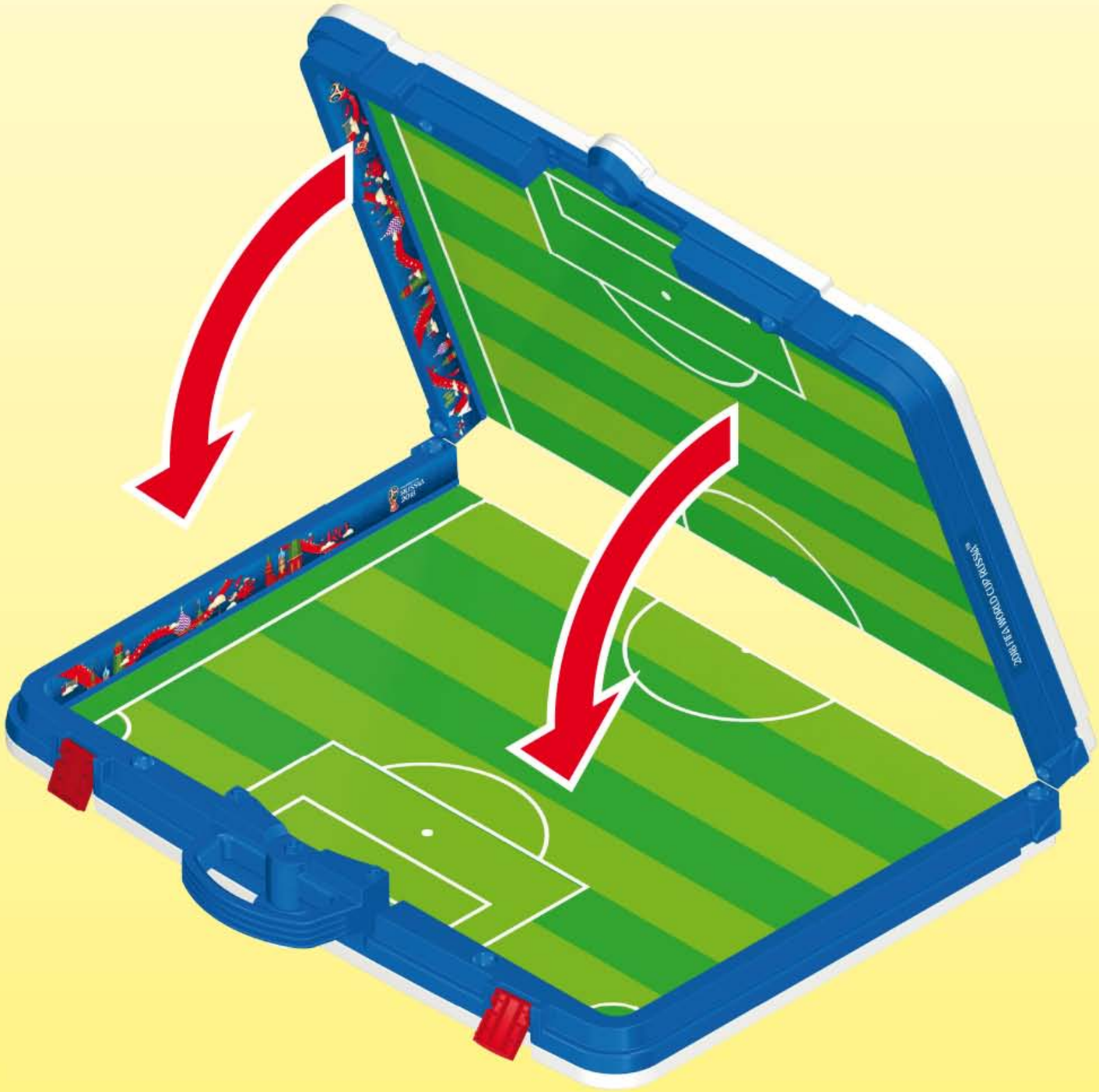

4

Serviceadressen finden Sie in allen Playmobil-Prospekten

Addresses of Customer Service Departments are shown in all Playmobil catalogues

L'adresse du service consommateurs est indiquée dans tous les catalogues Playmobil

Troverete gli indirizzi dei centri di assistenza in tutti i cataloghi Playmobil

In alle PLAYMOBIL catalogi vindt u het adres van onze klantendienst.

Las Direcciones de los Departamentos de Servicio al Consumidor se encuentran en todos los catálogos Playmobil

Η διεύθυνση του Γραφείου Εξυπηρέτησης Καταναλωτών PLAYMOBIL βρίσκεται σε όλους τους καταλόγους PLAYMOBIL.

pronounce: plāy-mō-bēēl

Abbildungen können vom Original abweichen. / Product may differ from image shown.
Les illustrations peuvent différer de l'original. / Afbeeldingen kunnen verschillen van het werkelijke artikel.

© 2017 geobra Brandstätter Stiftung & Co.KG
Brandstätterstr. 2-10
90513 Zirndorf, Germany.
No. 30 80 4695 12.17

100%

www.playmobil.com